3.2.5. 3-RAUM-MULTIZONE: RAM-53QH5
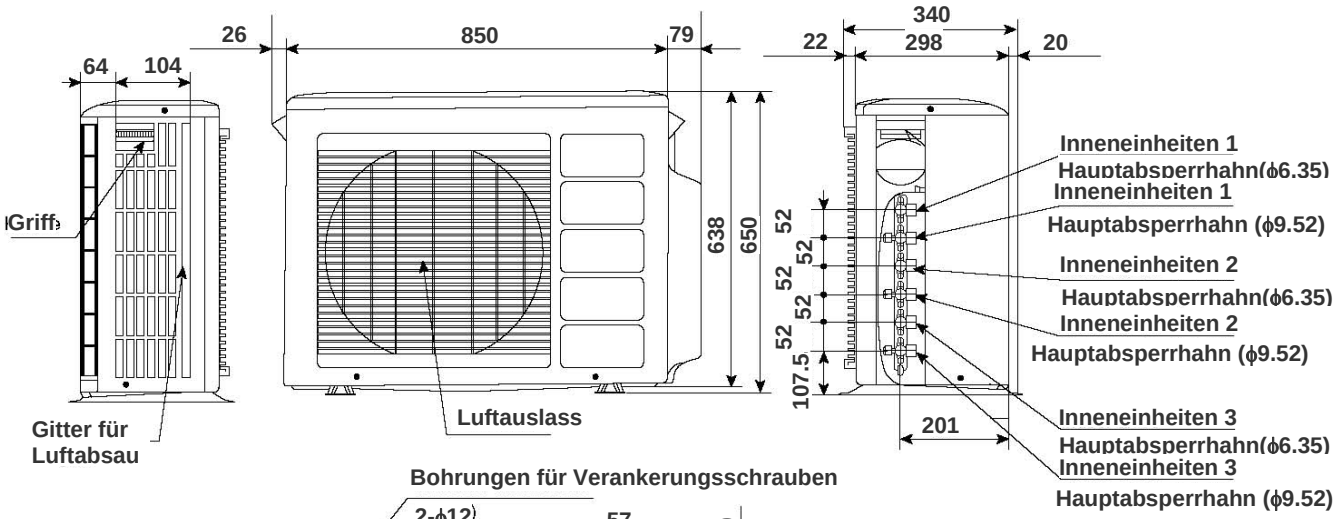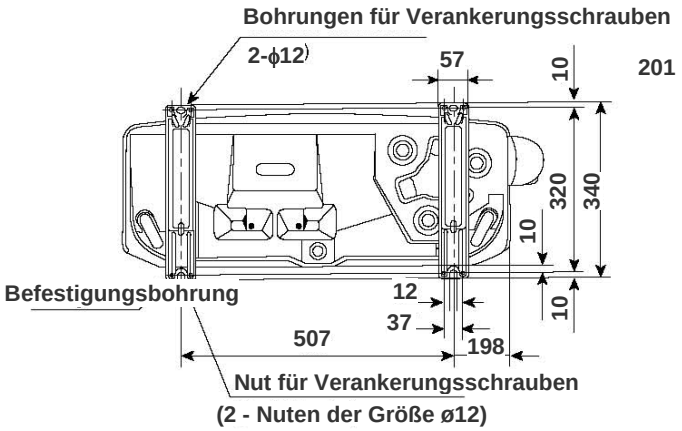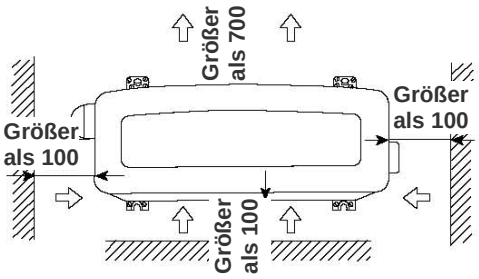
Unit: mm